PRECAST COMPRESSED SLAB SOLUTION

version 3.0

C&G UNITED TRADING

www.cgunited.com.my

C & G United Trading is one of the major suppliers of precast concrete products in Malaysia. Our company supplies a wide range of quality Precast Concrete Products to the construction industry all across country. We also can Design, Customize and Manufacture other size or specifications according to customer requirement upon request.

Our products included:

- Compressed Slab
- Road Barrier
- Concrete Half Round Drain
- Concrete V Shape Drain
- U Drain
- Box Culvert
- Road Kerb
- Concrete Slab
- Ventilation Block
- RC Septic Tank
- Concrete Post
- RC Pipe Culvert
- Catch Pit
- Compressed Manhole Cover
- Manhole Chamber Ring
- Scupper Grating

QUALITY DURABILITY ECONOMY

ARE SYNONYMOUS WITH

THE NAME C & G UNITED TRADING

We are also supplying Salt Glaze Ware Products such as **SGW pipe, SGW HR drain and all type of building materials.** Our products favored and widely used in private and government projects.

CUSTOMIZE SIZE AVAILABLE

COST EFFECTIVE | **SUPERIOR RESISTANCE** | **HIGHEST QUALITY ASSURANCE**

ExtraShield™

PRECAST COMPRESSED SLAB

Developed by C & G United Trading

With the emergence of many **COMPRESSED SLAB** in the market lately, many customers assume that **COMPRESSED SLAB** and **ExtraShield™ COMPRESSED SLAB** are the same thing.

ExtraShield™ COMPRESSED SLAB is the latest generation of high range compressed slab developed by C & G UNITED TRADING. Compare with the former first generation ordinary compressed slab, the **ExtraShield™ COMPRESSED SLAB** has a series of advantages - Significant strength increasing, good environmental performance and high durability.

Here's the truth:

COMPRESSED SLAB and **ExtraShield™ COMPRESSED SLAB** are two very different quality products.

ExtraShield™ Compressed Slab	Compressed Slab
- ExtraShield™ Treatment	-
- Concrete G50N	- Concrete G25N
- Super smooth surface	- Rough Surface
- Light Grey color	- Dark Grey color
- G500 BS steel bar	- CQ bar
- Reinforcement fully welded	- Reinforcement tied by wire
- Mosses free	-
- Weather resistance	-

ExtraShield™ TREATMENT

ExtraShield™ Compressed Slab

General Compressed Slab

SINGLE SLAB

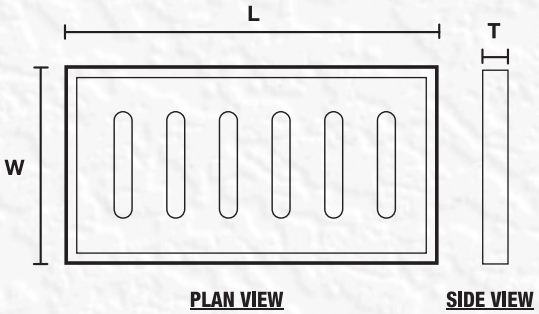

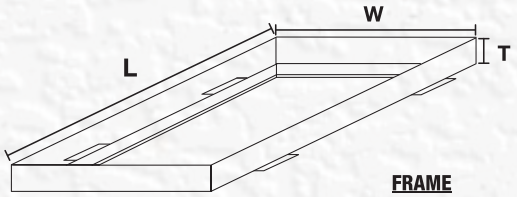

	WIDTH (W)	LONG (L)	THICK (T)
SLAB	400	600	50
FRAME	410	610	50
SLAB	400	600	60
FRAME	410	610	60
SLAB	400	600	75
FRAME	410	610	75
SLAB	400	600	100
FRAME	410	610	100

TWIN SLAB

	WIDTH (W)	LONG (L)	THICK (T)
SLAB	800	600	50
FRAME	810	610	50
SLAB	8 00	600	60
FRAME	810	610	60
SLAB	800	600	75
FRAME	810	610	75
SLAB	800	600	100
FRAME	810	610	100

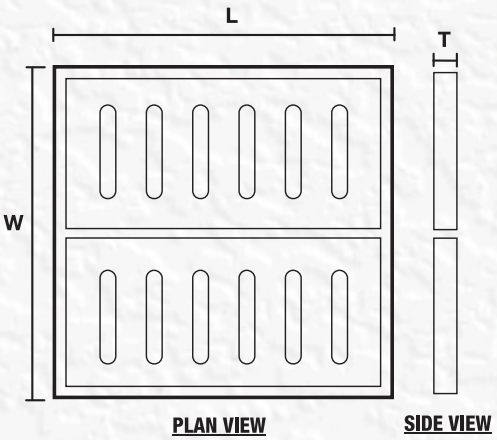

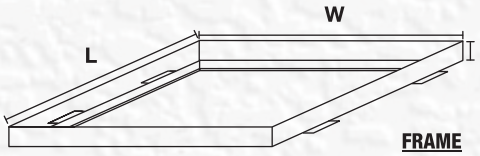

* CUSTOMIZE SIZE AVAILABLE UPON REQUEST
* IN VIEW OF CONTINUAL IMPROVEMENTS WE RESERVE THE RIGHT TO ALTER THE SPECIFICATION CONTAINED IN THIS CATALOGUE WITHOUT PRIOR NOTICE.

PRECAST COMPRESSED SLAB

ExtraShield™ TREATMENT

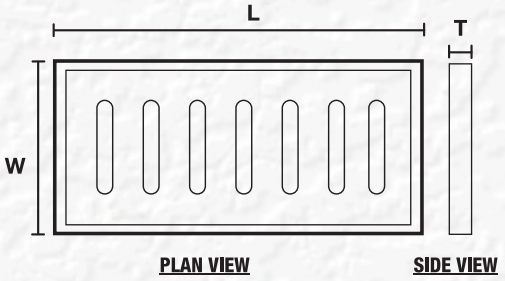

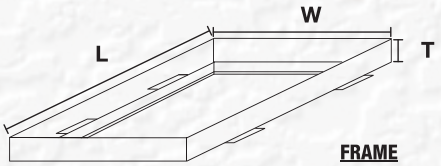

	WIDTH (W)	LONG (L)	THICK (T)
SLAB	240	590	60
FRAME	250	600	60
SLAB	260	700	50
FRAME	270	710	50
SLAB	300	600	50
FRAME	310	610	50
SLAB	330	750	110
FRAME	340	760	100
SLAB	350	700	60
FRAME	360	710	60
SLAB	375	750	75
FRAME	385	760	75
SLAB	400	800	100
FRAME	410	810	100
SLAB	400	1,200	100
FRAME	410	1,210	100
SLAB	450	600	50
FRAME	460	610	50
SLAB	450	600	75
FRAME	460	610	75
SLAB	450	600	100
FRAME	460	610	100
SLAB	450	900	75
FRAME	460	910	75
SLAB	450	900	100
FRAME	460	910	100
SLAB	525	1,050	75
FRAME	535	1,060	75
SLAB	525	1,050	100
FRAME	535	1,060	100

* CUSTOMIZE SIZE AVAILABLE UPON REQUEST
* IN VIEW OF CONTINUAL IMPROVEMENTS WE RESERVE THE RIGHT TO ALTER THE SPECIFICATION CONTAINED IN THIS CATALOGUE WITHOUT PRIOR NOTICE.

PRECAST COMPRESSED SLAB

ExtraShield™ TREATMENT

	WIDTH (W)	LONG (L)	THICK (T)
SLAB	300	300	50
FRAME	310	310	50
SLAB	450	450	50
FRAME	460	460	50

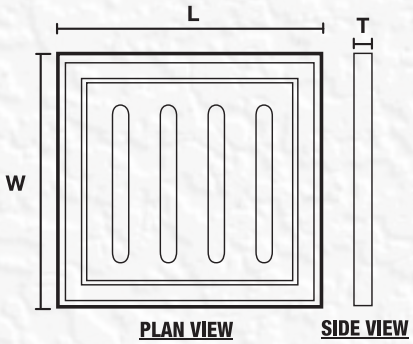

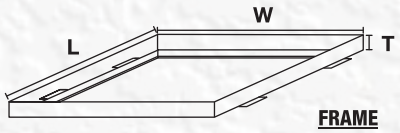

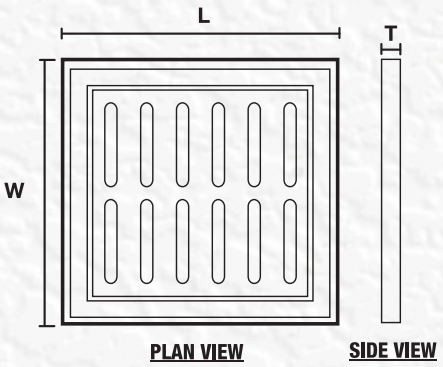

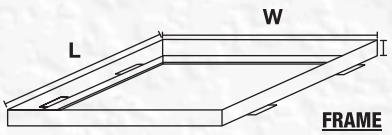

	WIDTH (W)	LONG (L)	THICK (T)
SLAB	600	600	50
FRAME	610	610	50
SLAB	600	600	100
FRAME	610	610	100
SLAB	700	700	50
FRAME	710	710	50
SLAB	700	700	100
FRAME	710	710	100
SLAB	800	800	100
FRAME	810	810	100

* CUSTOMIZE SIZE AVAILABLE UPON REQUEST
* IN VIEW OF CONTINUAL IMPROVEMENTS WE RESERVE THE RIGHT TO ALTER THE SPECIFICATION CONTAINED IN THIS CATALOGUE WITHOUT PRIOR NOTICE.

SMOOTH SURFACE SLAB

Without Hole

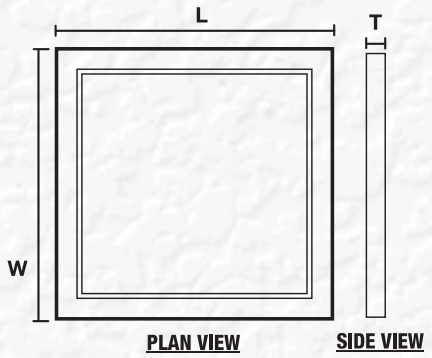

	WIDTH (W)	LONG (L)	THICK (T)
SLAB	300	300	50
SLAB	600	600	50
SLAB	600	600	60
SLAB	600	600	75

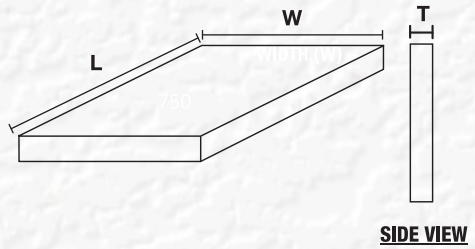

	WIDTH (W)	LONG (L)	THICK (T)
SLAB	300	600	50

With Hole

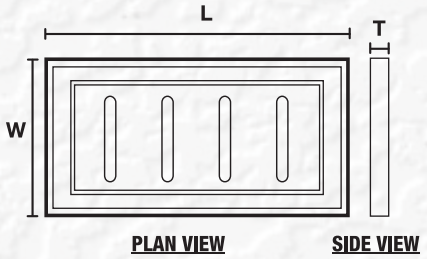

	WIDTH (W)	LONG (L)	THICK (T)
SLAB	420	600	75

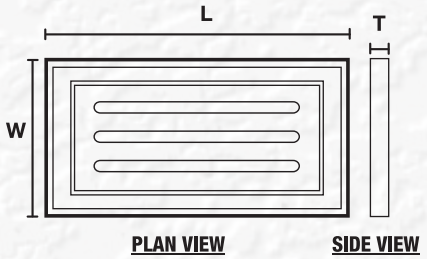

	WIDTH (W)	LONG (L)	THICK (T)
SLAB	420	600	75

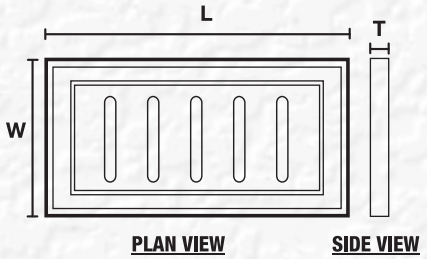

	WIDTH (W)	LONG (L)	THICK (T)
SLAB	375	750	50

* CUSTOMIZE SIZE AVAILABLE UPON REQUEST
* IN VIEW OF CONTINUAL IMPROVEMENTS WE RESERVE THE RIGHT TO ALTER THE SPECIFICATION CONTAINED IN THIS CATALOGUE WITHOUT PRIOR NOTICE.

OTHER PRODUCTS

Concrete Slab

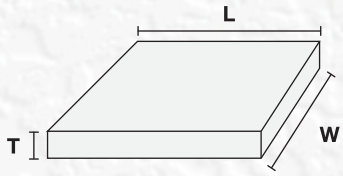

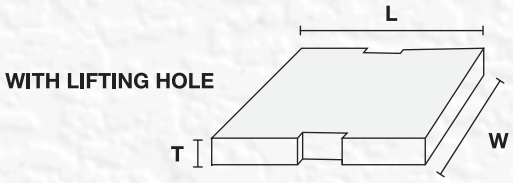

WIDTH (W)	LONG (L)	THICK (T)
300	600	50
600	600	50
600	600	75
600	600	100
600	750	75
600	750	100
600	900	75
600	900	100

Concrete Trough

DIAMETER (D)	LONG (L)
600	600
750	600
900	600
1,200	600

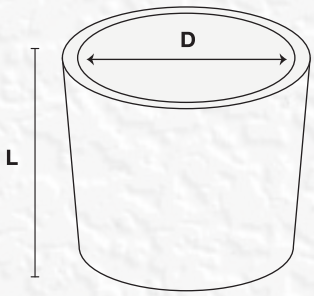

Broom Line Surface Slab

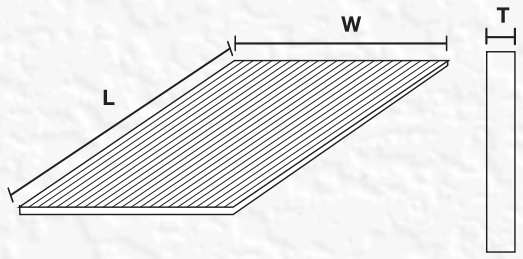

SIDE VIEW

	WIDTH (W)	LONG (L)	THICK (T)
SLAB	300	600	50

* CUSTOMIZE SIZE AVAILABLE UPON REQUEST
* IN VIEW OF CONTINUAL IMPROVEMENTS WE RESERVE THE RIGHT TO ALTER THE SPECIFICATION CONTAINED IN THIS CATALOGUE WITHOUT PRIOR NOTICE.

OTHER PRODUCTS

Road Barrier

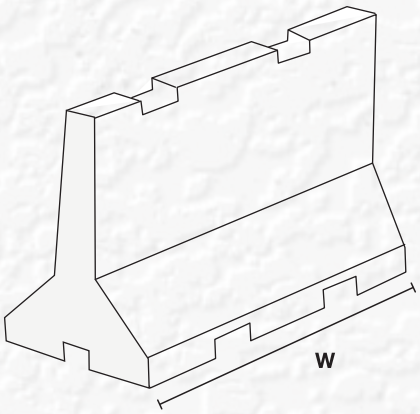

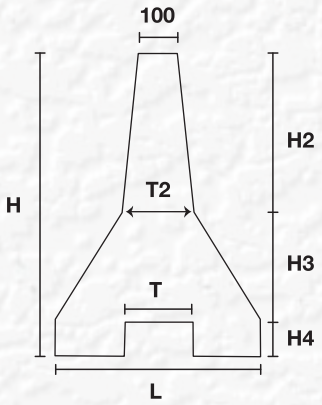

L	H	W	T	T2	H2	H3	H4
450	800	1000	200	140	450	300	50

Concrete Septic Tank with Filter

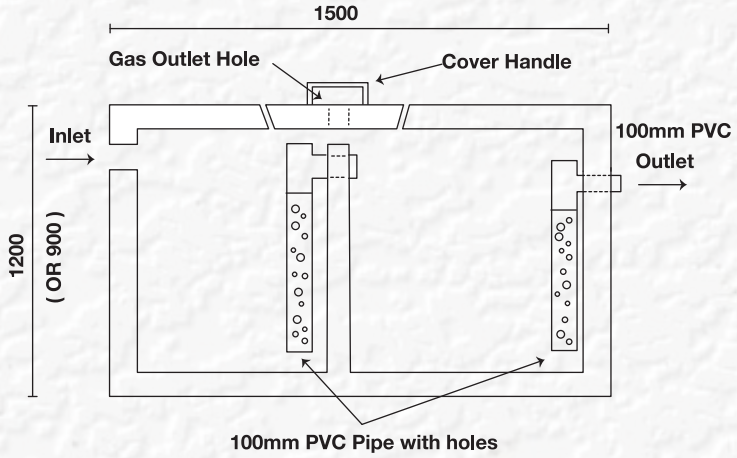

DIAMETER (D)	LONG (L)	PERSON
900	1,500	15
1,200	1,500	30

* CUSTOMIZE SIZE AVAILABLE UPON REQUEST
* IN VIEW OF CONTINUAL IMPROVEMENTS WE RESERVE THE RIGHT TO ALTER THE SPECIFICATION CONTAINED IN THIS CATALOGUE WITHOUT PRIOR NOTICE.

OTHER PRODUCTS

Wheel Stopper

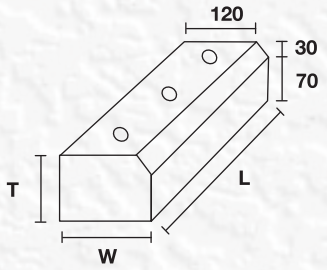

WIDTH (W)	THICK (T)	LONG (L)
150	100	700

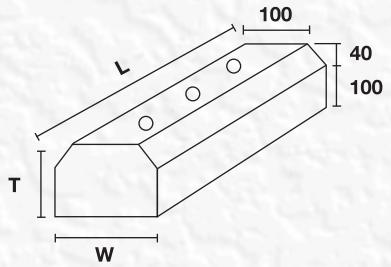

WIDTH (W)	THICK (T)	LONG (L)
160	120	1800

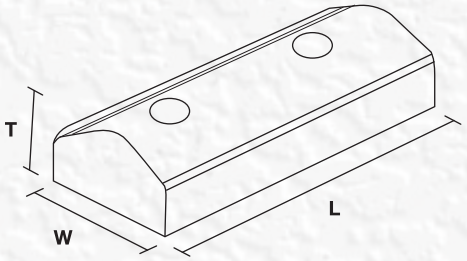

WIDTH (W)	THICK (T)	LONG (L)
200	125	500

Road Kerb

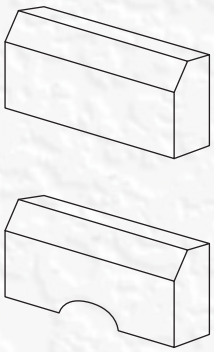

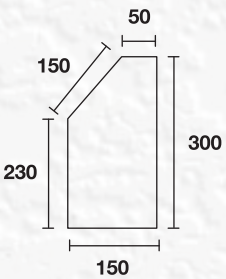

WIDTH (W)	THICK (T)	LONG (L)
150	300	600

* CUSTOMIZE SIZE AVAILABLE UPON REQUEST
* IN VIEW OF CONTINUAL IMPROVEMENTS WE RESERVE THE RIGHT TO ALTER THE SPECIFICATION CONTAINED IN THIS CATALOGUE WITHOUT PRIOR NOTICE.

OTHER PRODUCTS

Channel Slab

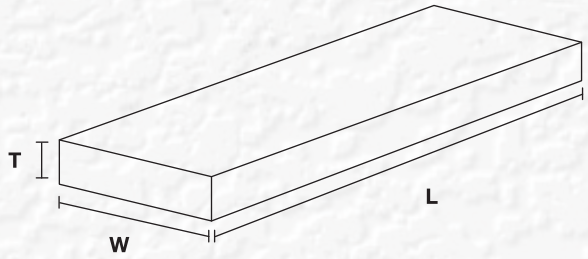

WIDTH (W)	LONG (L)	THICK (T)
150	600	70

Round Planter Box

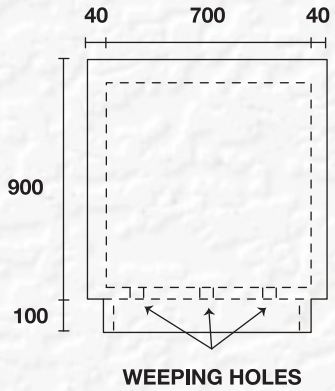

DIAMETER (D)	LONG (L)
700	1,000

Half Round U Drain

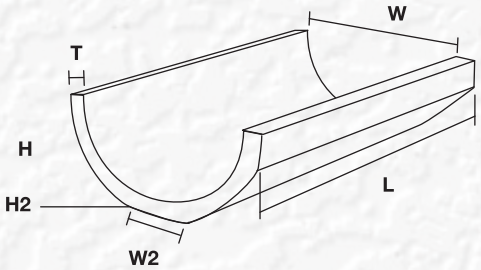

W	L	H	T	W2	H2
150	760	75	30	90	20
225	760	115	30	150	30
300	760	150	30	135	35
450	600	225	50	230	50
600	600	300	50	290	55
With BRC					
300	600	150	50	200	65

Concrete Pipe

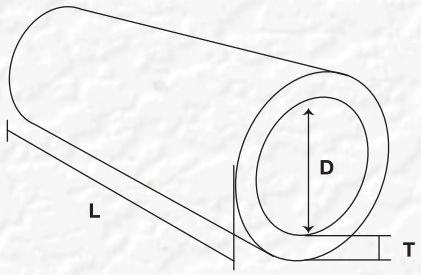

DIAMETER (D)	LONG (L)	THICK (T)
225	900	30
300	1,500	50
450	1,500	50
600	1,500	50
750	1,500	50
900	1,500	50
1,200	1,500	50

* CUSTOMIZE SIZE AVAILABLE UPON REQUEST
* IN VIEW OF CONTINUAL IMPROVEMENTS WE RESERVE THE RIGHT TO ALTER THE SPECIFICATION CONTAINED IN THIS CATALOGUE WITHOUT PRIOR NOTICE.

OTHER PRODUCTS

V Shape Block Drain

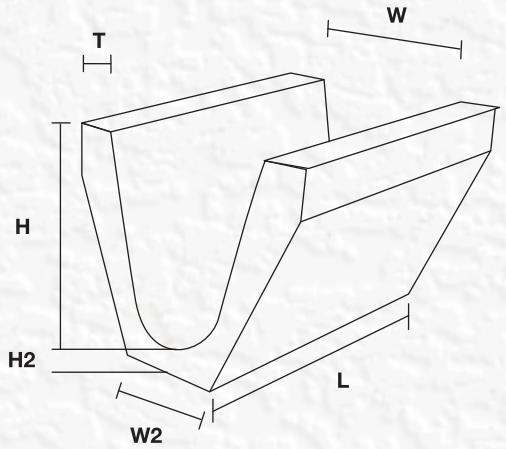

Without BRC

W	H	L	T	W2	H2
300	300	600	63	230	65
375	375	600	50	170	60
450	450	600	50	200	70
600	600	600	50	240	75

With BRC

W	H	L	T	W2	H2
300	300	600	63	230	65
300	300	600	75	225	70
375	375	600	75	270	100
450	450	600	80	250	100
600	600	600	80	345	100

V Shape Block Drain with Lip

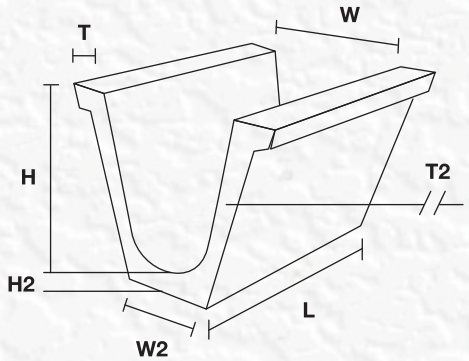

W	H	L	T	W2	H2	T2
300	300	600	50	155	50	35

Pudu Cut Drain

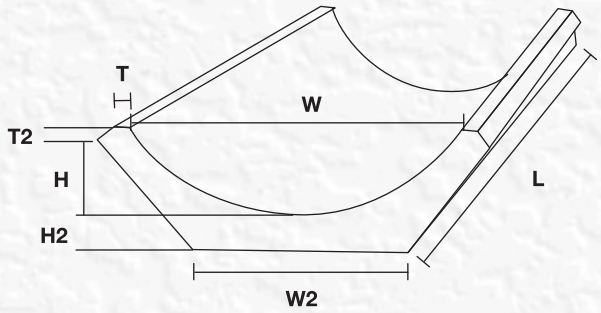

W	L	H	T	W2	H2	T2
900	600	230	50	220	65	50
1,050	600	190	50	300	90	50

* CUSTOMIZE SIZE AVAILABLE UPON REQUEST
* IN VIEW OF CONTINUAL IMPROVEMENTS WE RESERVE THE RIGHT TO ALTER THE SPECIFICATION CONTAINED IN THIS CATALOGUE WITHOUT PRIOR NOTICE.

OTHER PRODUCTS

Embankment Shoulder Drain

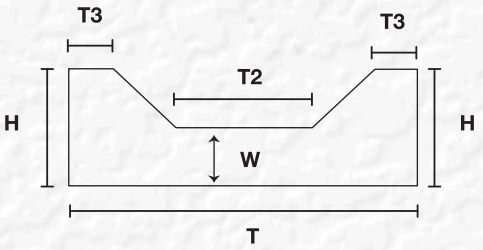

ESD 1

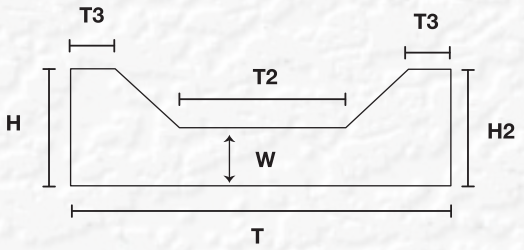

ESD 3

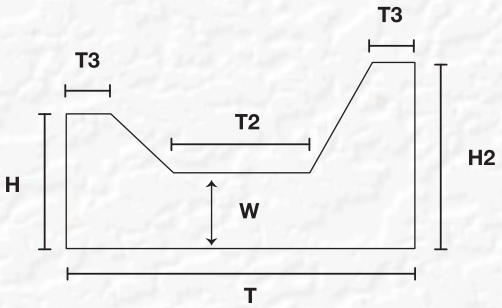

ESD 2

CODE	T	L	W	H	H2	T2	T3
ESD 1	500	1000	70	200	0	150	50
ESD 2	560	1000	70	200	0	200	50
ESD 3	460	600	100	175	225	150	50

Compressed Manhole Cover (18" x 24")

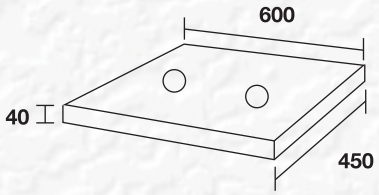

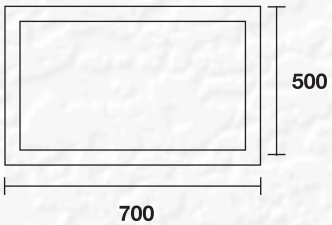

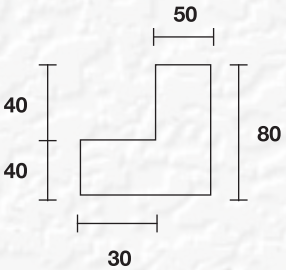

* CUSTOMIZE SIZE AVAILABLE UPON REQUEST
* IN VIEW OF CONTINUAL IMPROVEMENTS WE RESERVE THE RIGHT TO ALTER THE SPECIFICATION CONTAINED IN THIS CATALOGUE WITHOUT PRIOR NOTICE.

OTHER PRODUCTS

300mm U DRAIN

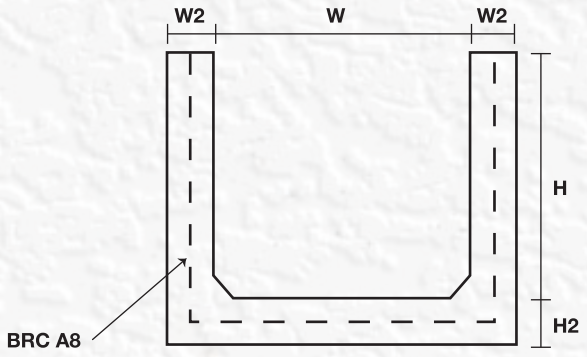

W	H	L	W2	H2
300	300	1000	60	65
300	450	1000	60	65
300	600	1000	60	65

230mm U Drain with Starter Hole

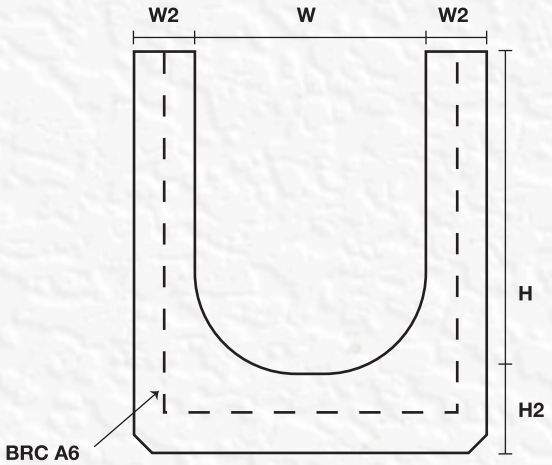

W	H	L	W2	H2
230	390	600	75	100

Option Compressed Slab Cover

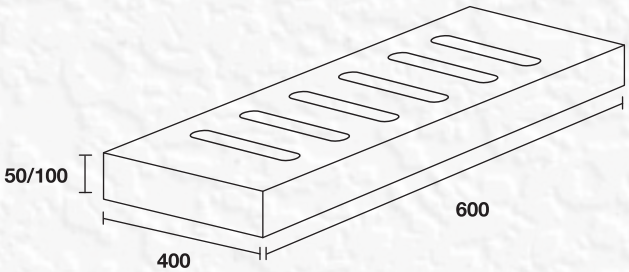

* CUSTOMIZE SIZE AVAILABLE UPON REQUEST
* IN VIEW OF CONTINUAL IMPROVEMENTS WE RESERVE THE RIGHT TO ALTER THE SPECIFICATION CONTAINED IN THIS CATALOGUE WITHOUT PRIOR NOTICE.

OTHER PRODUCTS

Scupper Grating (550mm x 400mm x 1000mm)

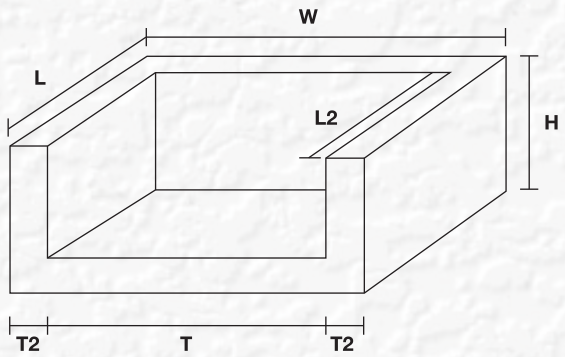

L	H	W	T	L2	T2
550	400	1000	800	300	100

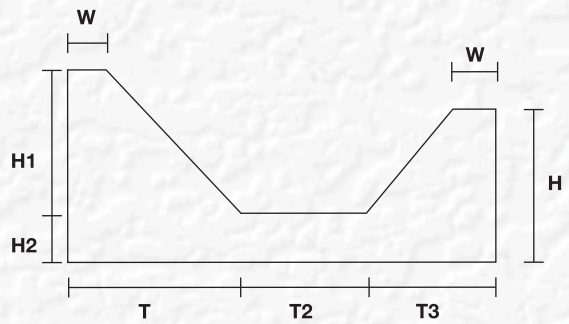

W	H	H1	H2	T	T2	T3
50	180	170	80	220	170	160

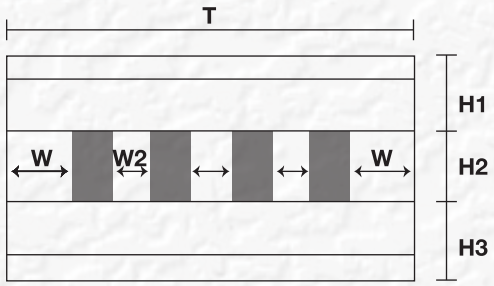

T	H1	H2	H3	W	W2
1000	220	170	160	150	100

* CUSTOMIZE SIZE AVAILABLE UPON REQUEST
* IN VIEW OF CONTINUAL IMPROVEMENTS WE RESERVE THE RIGHT TO ALTER THE SPECIFICATION CONTAINED IN THIS CATALOGUE WITHOUT PRIOR NOTICE.

PRECAST CATCH PIT

(450mm x 350mm x 700mm)

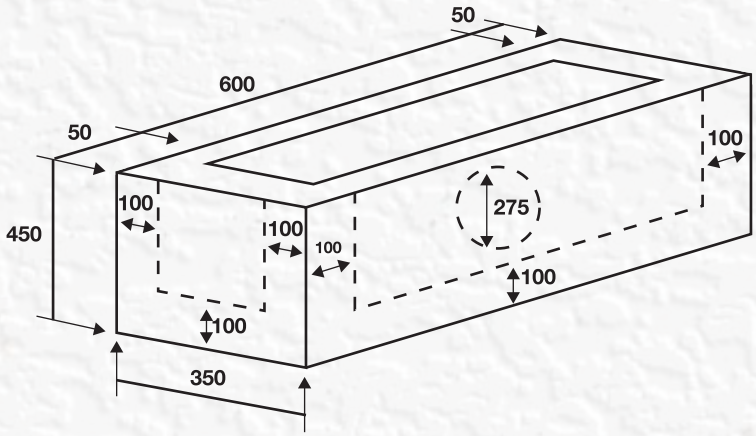

* CONCRETE GRADE - 25N/MM2

Option A (MS Grating with Hot Dip Galvanized)

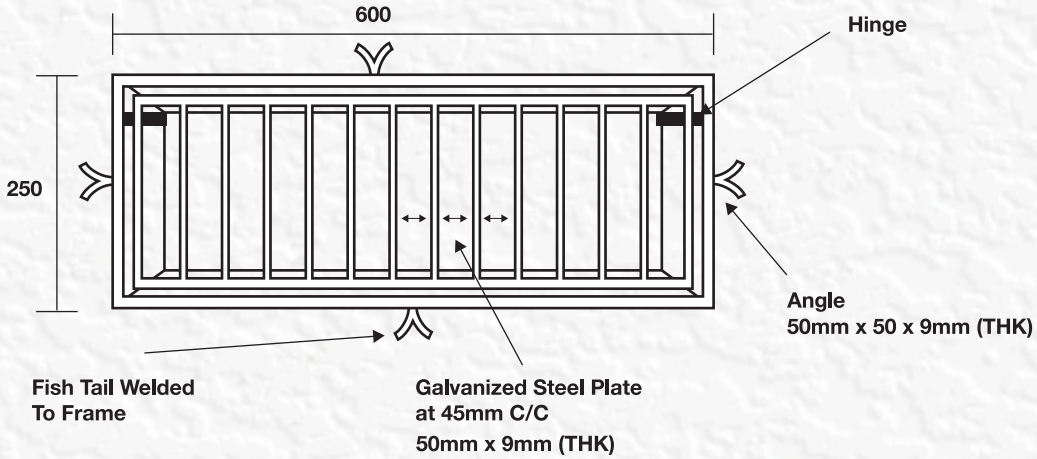

Option Compressed Slab Cover

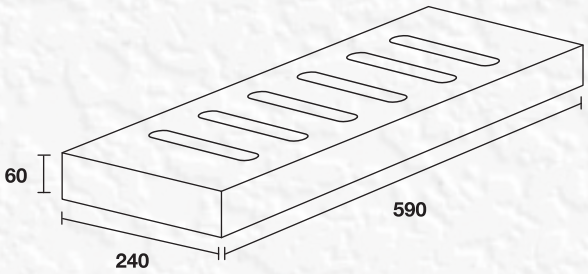

* CUSTOMIZE SIZE AVAILABLE UPON REQUEST
* IN VIEW OF CONTINUAL IMPROVEMENTS WE RESERVE THE RIGHT TO ALTER THE SPECIFICATION CONTAINED IN THIS CATALOGUE WITHOUT PRIOR NOTICE.

PRECAST CATCH PIT

445mm x 280mm x 495mm

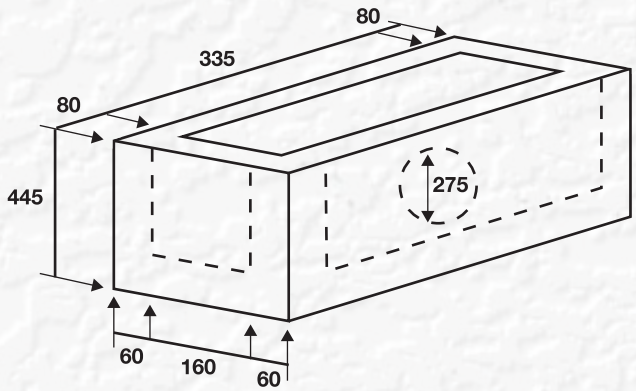

* CONCRETE GRADE 25N/MM2

MS Grating with Hot Dip Galvanized

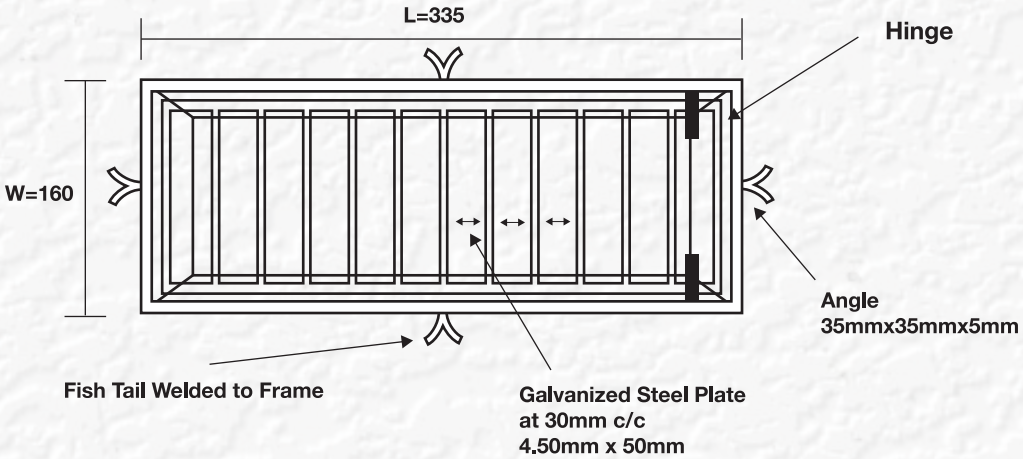

* CUSTOMIZE SIZE AVAILABLE UPON REQUEST
* IN VIEW OF CONTINUAL IMPROVEMENTS WE RESERVE THE RIGHT TO ALTER THE SPECIFICATION CONTAINED IN THIS CATALOGUE WITHOUT PRIOR NOTICE.

VENTILATION BLOCKS

VB 216

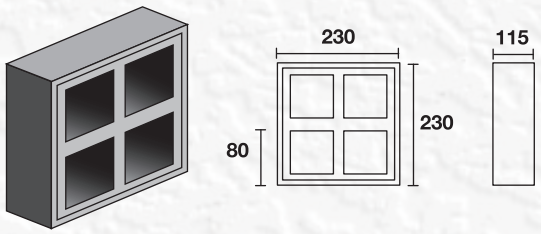

VB 202

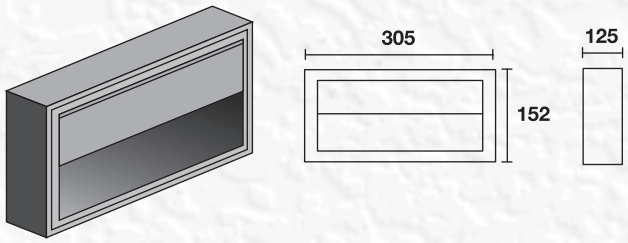

VB 201

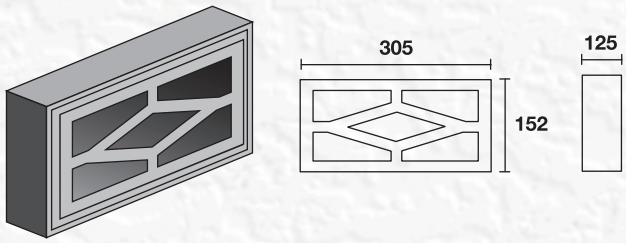

VB 208

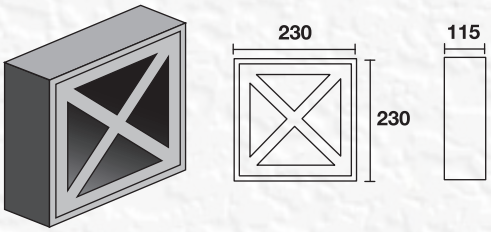

VB 212

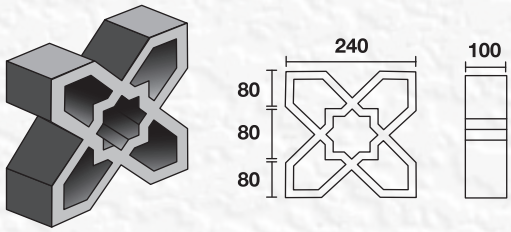

VB 215

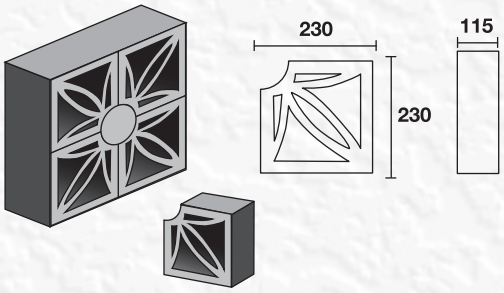

VB 218

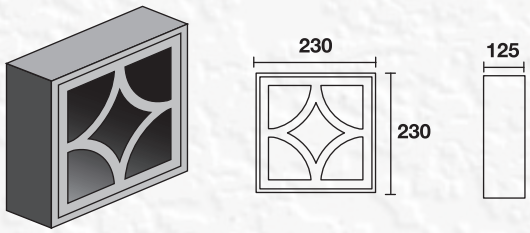

VB 228

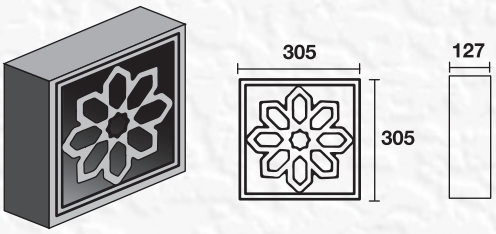

* CUSTOMIZE SIZE AVAILABLE UPON REQUEST
* IN VIEW OF CONTINUAL IMPROVEMENTS WE RESERVE THE RIGHT TO ALTER THE SPECIFICATION CONTAINED IN THIS CATALOGUE WITHOUT PRIOR NOTICE.

SALT GLAZED WARE

Salt Glazed Ware Drain

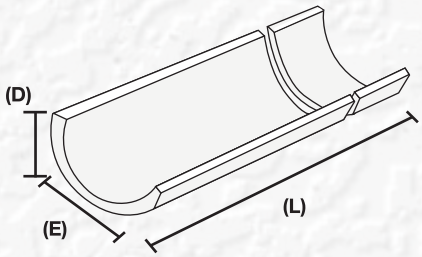

CODE	INTERNAL DIA. (INCH)	D	E	L	W.T	WEIGHT (KG)
SGWD 4	4″	2″	5″	22″	0.6″	3
SGWD 6	6″	3″	7″	22″	0.6″	5
SGWD 9	9″	4.5″	10.5″	22″	0.8″	8
SGWD 12	12″	6″	13″	22″	0.8″	11
SGWD 18	18″	9″	20″	18″	1″	19

Salt Glazed Ware Pipe

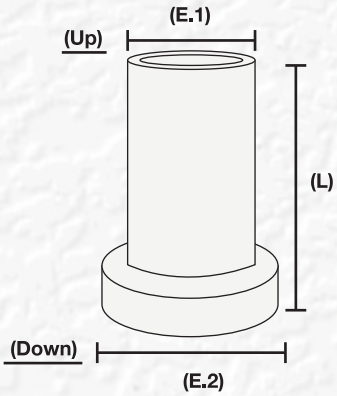

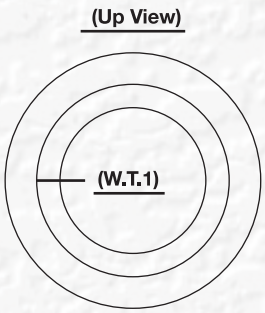

CODE	INTERNAL DIA. (INCH)	E.1	E.2	L	W.T 1	WEIGHT (KG)
SGWP 4	4″	5″	6.5″	22″	0.6″	7
SGWP 6	6″	7″	9″	22″	0.6″	10
SGWP 9	9″	10″	12.5″	22″	0.6″	17

*** The above size will be sightly varied due to manufacturing process.**

C & G UNITED TRADING

C & G UNITED TRADING

(002143011-P)

tel : 016 - 269 9877
fax : 03 8938 9360
email : engtiong9336@gmail.com
website : www.cgunited.com.my

Casting Yard:
Sri Gombak, Selangor.

Correspondence Address:
A07-01, Belimbing Height Apartment,
Jalan Belimbing Indah,
43300 Seri kembangan, Selangor.